Dylan Thornburg & Megan Choy

SANTA CLARA UNIVERSITY	ELEN 115 Spring 2024	Shoba Krishnan

Laboratory #5: Diode Rectifiers and their Applications

OBJECTIVES

• To study diode rectifiers, and analyze their performance.

Section A: Simulations

Part 1 : Half wave Rectifier:

Draw the schematic for the half wave rectifier given below in LTSpice.

Use a D1N4148 diode Rload = 10K resistor.

Note: To add a transformer one simply draws each winding of the transformer as an inductor and couples the inductors with a SPICE directive called a K-statement (e.g. "K1 L1 L2 1"). Setting the turns ratio of the transformer is simply a matter of choosing the right inductor values. Remember, the inductance is proportional to the square of the turns ratio, a turns ratio of 10:1 gives a 100:1 inductance ratio.

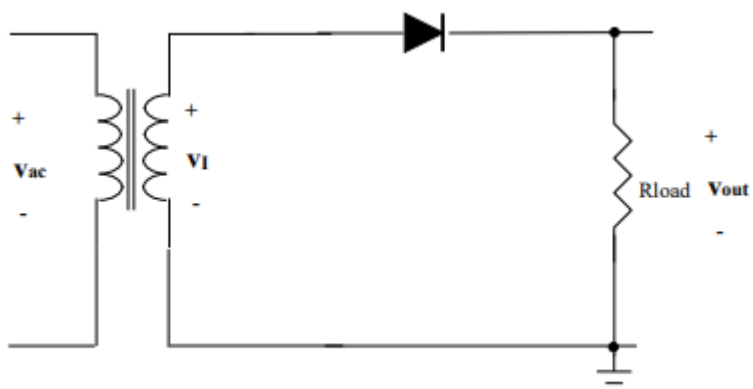

Half Wave Rectifier

Schematic of Half Wave Rectifier

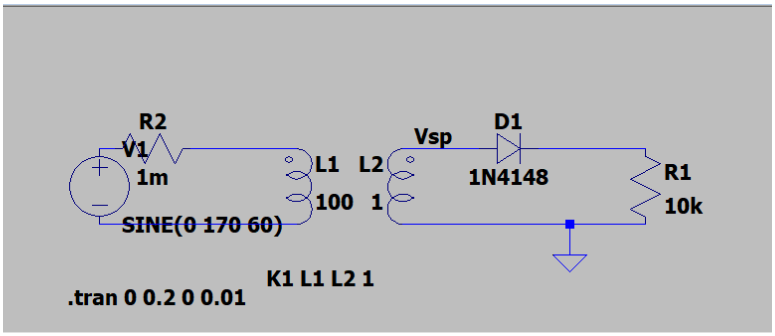

Note: 120Vrms=170V peak

(a) Give an input of 120Vrms to the transformer primary. You should then observe a 12V rms output at the primary as the turns ratio is 10:1.

Why is a transformer used?

We use a transformer so we can isolate the circuit we want to use. This protects the parts from being blown up if there is an issue with the outlet.

(b) Perform a transient analysis for a few cycles of the sinusoidal input.

10:1 Input Wave

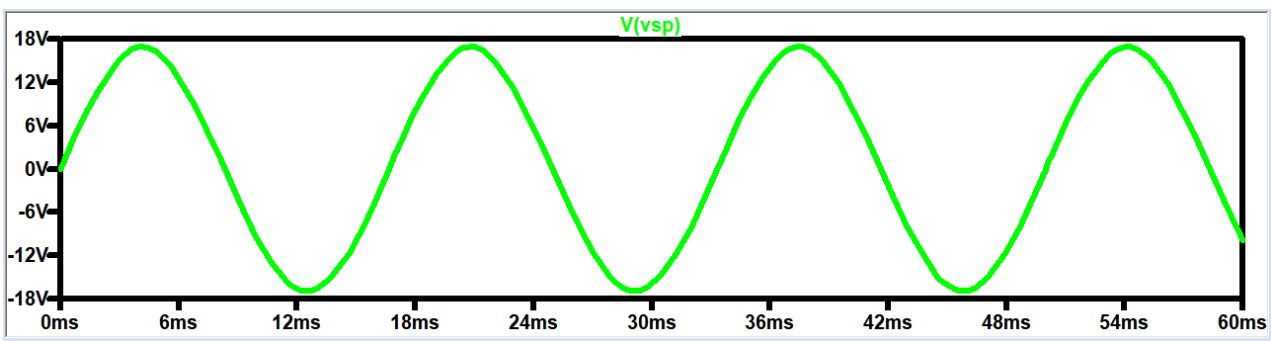

(c) Plot the input and output on one plot to observe the rectifier action. Obtain a screen shot. Find the following for the circuit.

Vsp and Vout vs Time

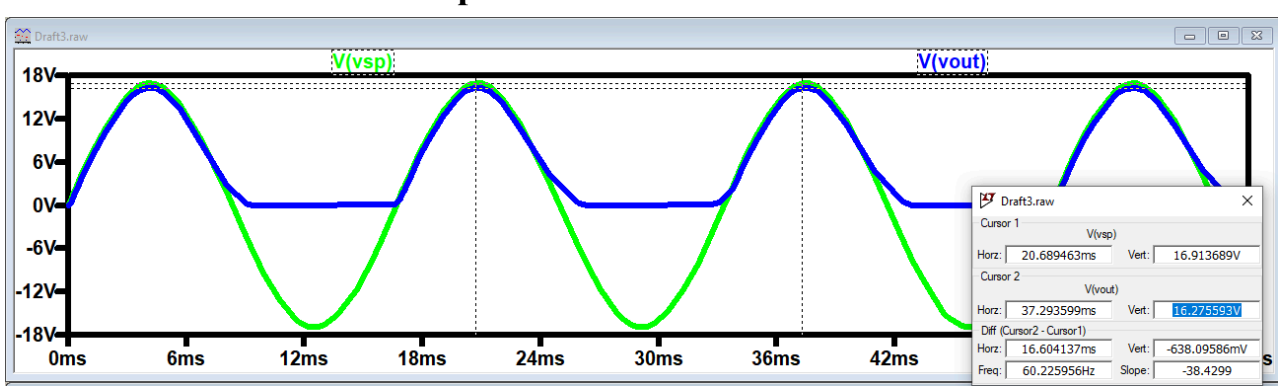

(i) The peak output voltage.

The peak for the output is 16.27 V

(ii) The average output voltage.

The average for the input is 0 V but the average of the output is ~16.3/pi-.6= 4.59V

(iii) The peak diode current for the diode(s).

Additional Current of Diode

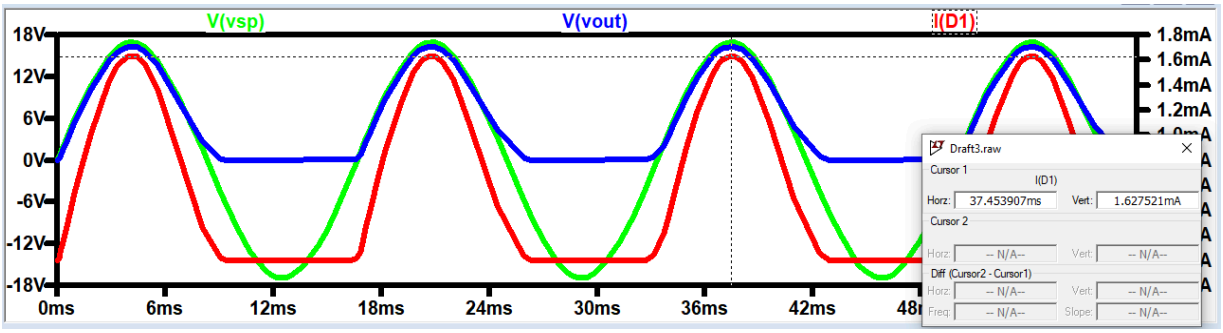

(iv) The peak reverse voltage across the diode(s).

The peak is Vpeak-Vdo=16.38V.

What would change if the resistor was increased by a factor of 10?

The current decreases by a factor of 10.

(d) Connect a capacitor of 1uF in parallel with the resistor and observe the output. Obtain a screen shot. Measure the **peak-to-peak ripple.**

Vout with Capacitor

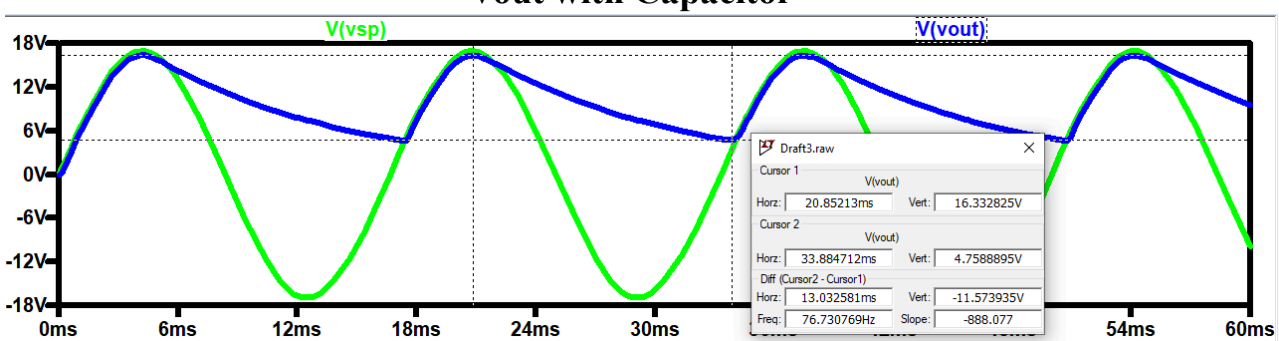

The peak to peak is 16.33-4.758 V = 11.572

What would change if the capacitor was increased by a factor of 10?

The ripple is smaller. This is because the capacitor can the charge for longer. The increased capacitor makes the time constant smaller and thus discharge slower.

Vout with Large Capacitor

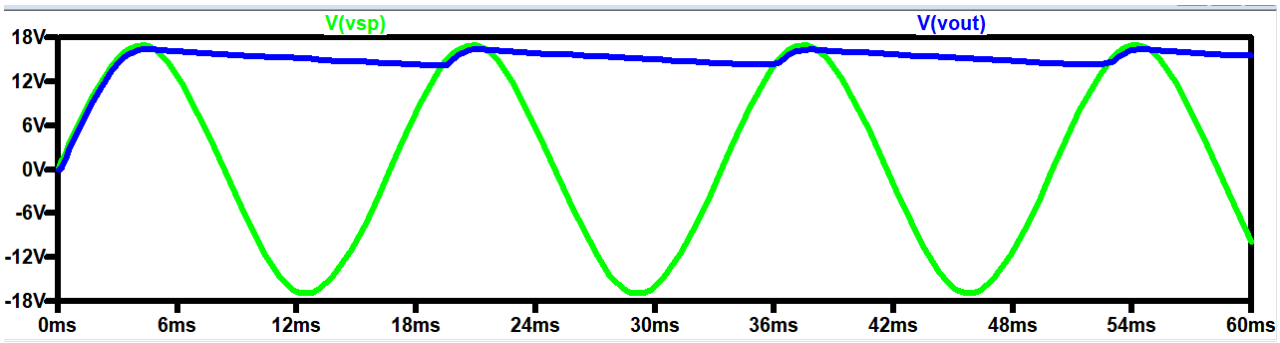

What would change if the resistor was decreased by a factor of 10?

Resistor changes to 1k so the time constant changes, which makes the circuit discharge faster. Therefore, the circuit has enough time to fully discharge and the minimum voltage reaches 0 V.

Vout with Small Resistor

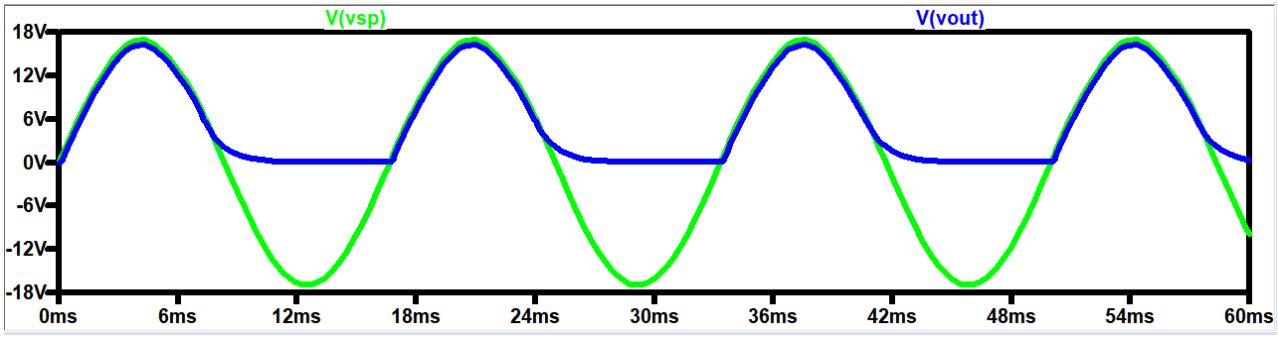

Observe the effect on the output waveform for each case.

What is the reason for the changes you observe in these waveforms?

The reason for the changes is the change in time constant as both capacitor and resistor value affect the time constant.

How does this change the performance of a rectifier?

Changing the resistor or capacitor can make the circuit better or worse. The greater the resistor and capacitor, the better the rectifier will work.

What limitations would this rectifier have?

This rectifier is a half wave rectifier and thus only converts half of the sin wave to a non-zero voltage. To make it better, we could make it a full wave rectifier and convert all of the sin wave to a non zero average voltage.

(e) Remove the transformer and connect a DC source at the input to the rectifier.

(i) Run a DC sweep from –5V to 5V.

(ii) Plot the output versus input curve to obtain the transfer characteristics.

One Diode Transfer Characteristic

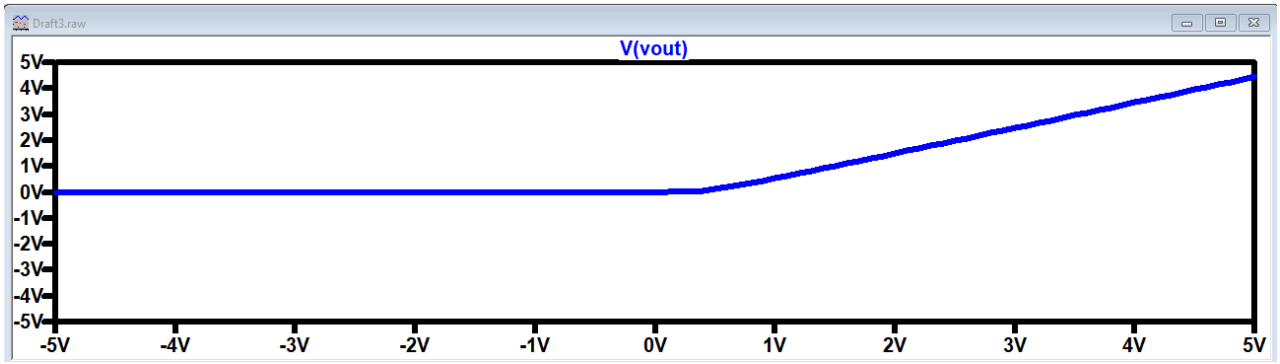

If the diode turn-on voltage changed, what would change on this curve?
What does the slope of the curve indicate?
It would change where it turned on. This change would be seen by either a left or right shift on the x axis. The slope is Vout/Vin.

<u>Part 2- Bridge Rectifier:</u>

In this section you will be simulating a diode bridge rectifier and analyzing its performance. Draw the rectifier circuit in the figure below in LTSpice.
All diodes are D1N4148. R= 10 Kohms.

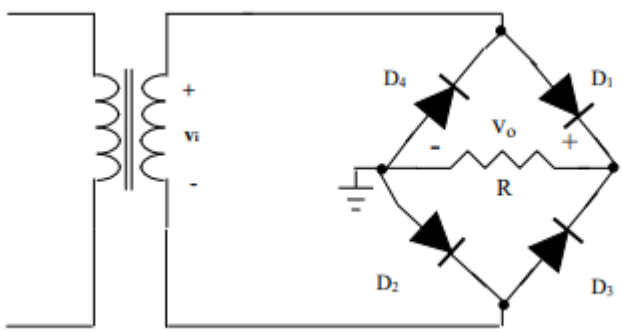

Bridge wave rectifier

(a) Give an input of 120Vrms to the transformer primary. You should then observe a 12V rms output at the primary as the turns ratio is 10:1.

Bridge Rectifier Schematic

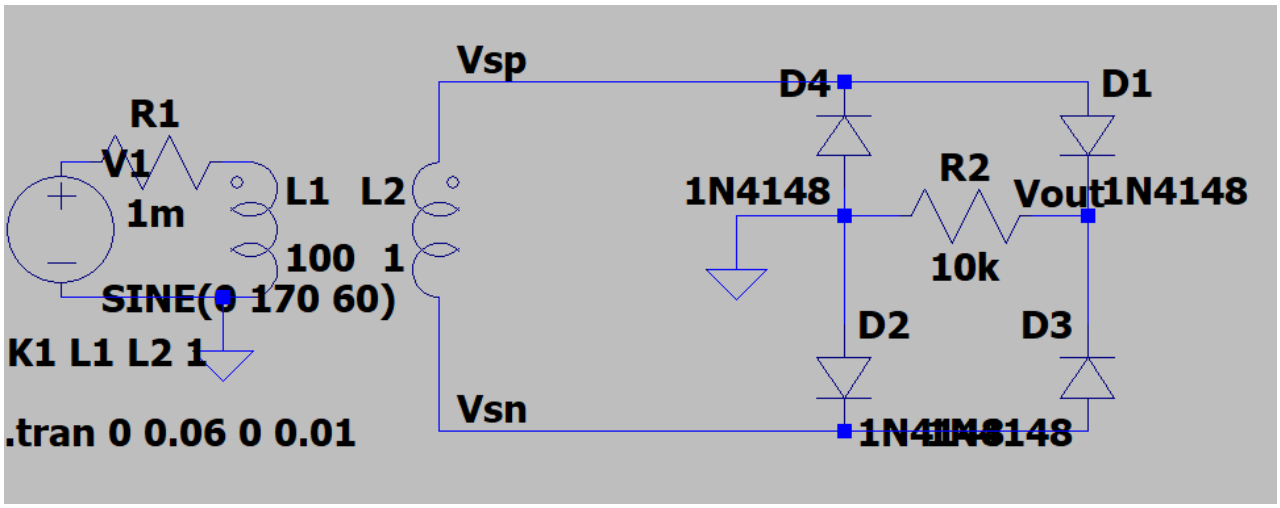

(b) Perform a transient analysis for a few cycles of the sinusoidal input.

Vsp and Vout vs Time

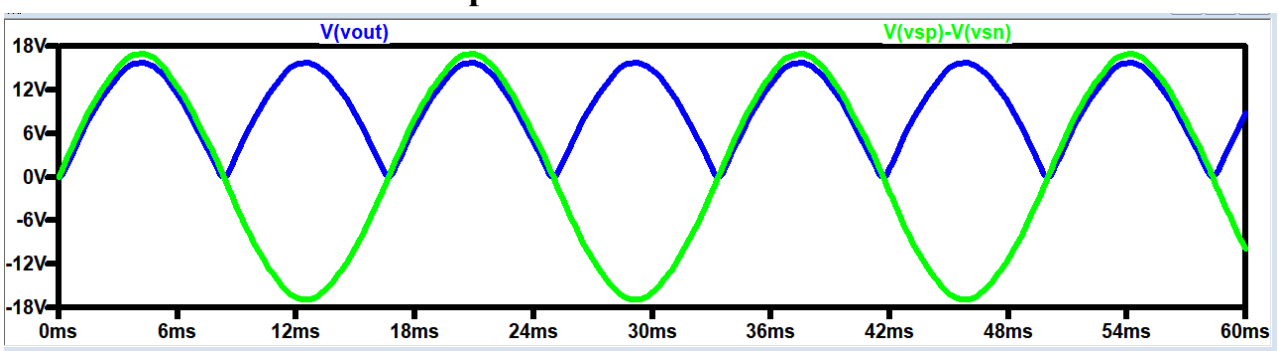

(c) Plot the input and output on one plot to observe the rectifier action. Obtain a screen shot. Find the following for the circuit.

Measuring for Peak Output Voltage

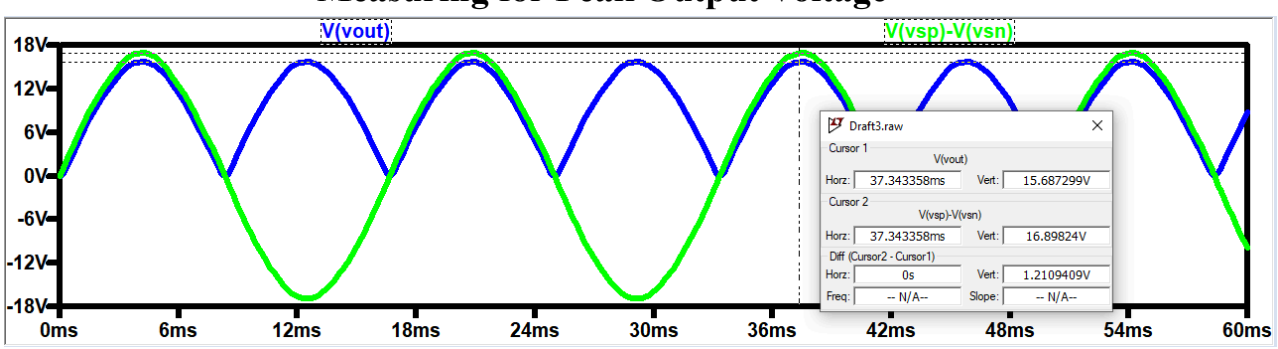

(i) The peak output voltage.
Peak Voltage is 15.69 at the output and 16.9 at the input. We see a voltage drop of .6V.

(ii) The average output voltage.
2Vm/pi - Vdo = 2(15.7)/pi - .6 = 9.4V

Measuring for Peak Current of Diode

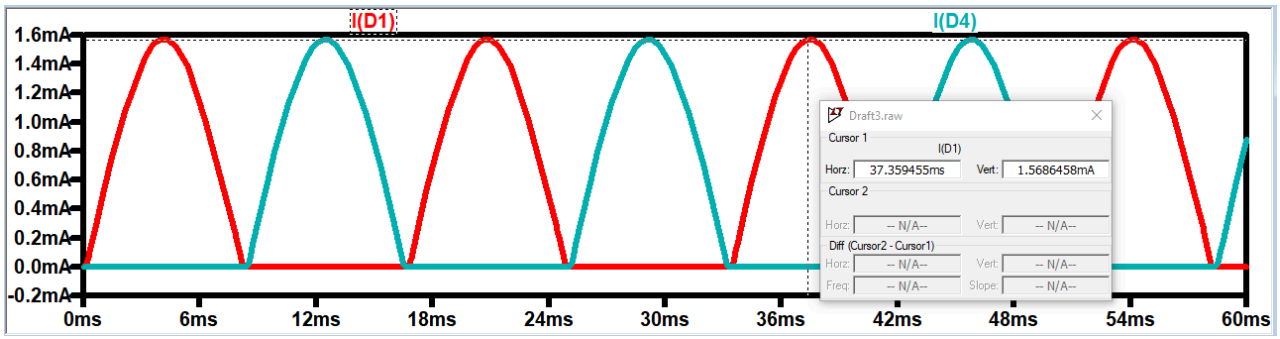

(iii) The peak diode current for the diode(s).
The peak current is 1.57mA.

(iv) The peak reverse voltage across the diode(s).
2Vpeak - Vdo = 2(15.7)-.6=30.8V

What would change if the resistor was increased by a factor of 10?
Same thing as before, the current would go decrease by a factor of 10

(d) Connect a capacitor of 1uF in parallel with the resistor and observe the output. Obtain a screen shot. Measure the **peak-to-peak ripple.**

Bridge Rectifier with Capacitor Schematic

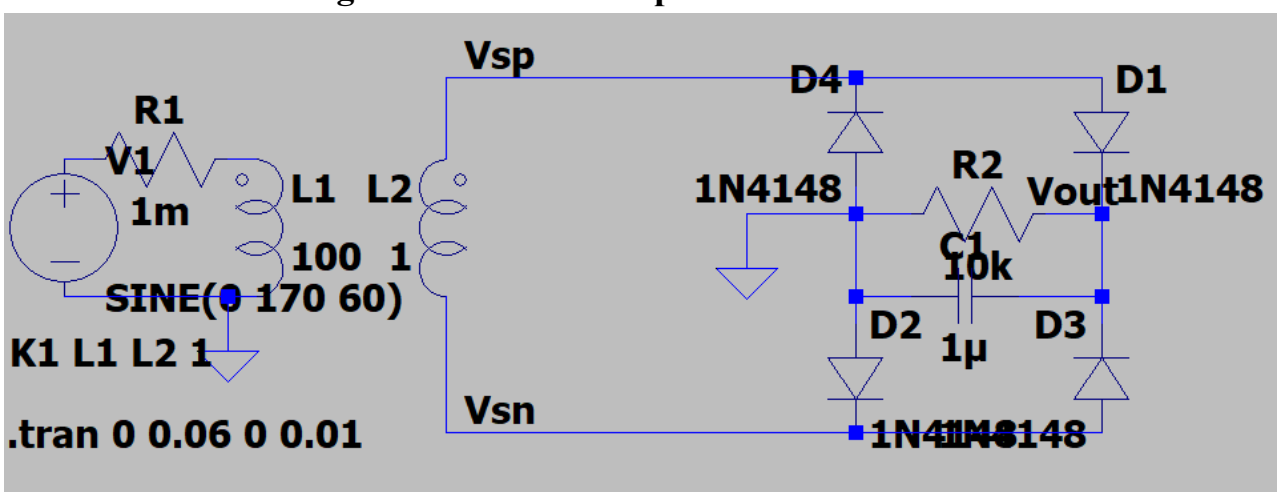

Bridge Rectifier with Capacitor Waveform

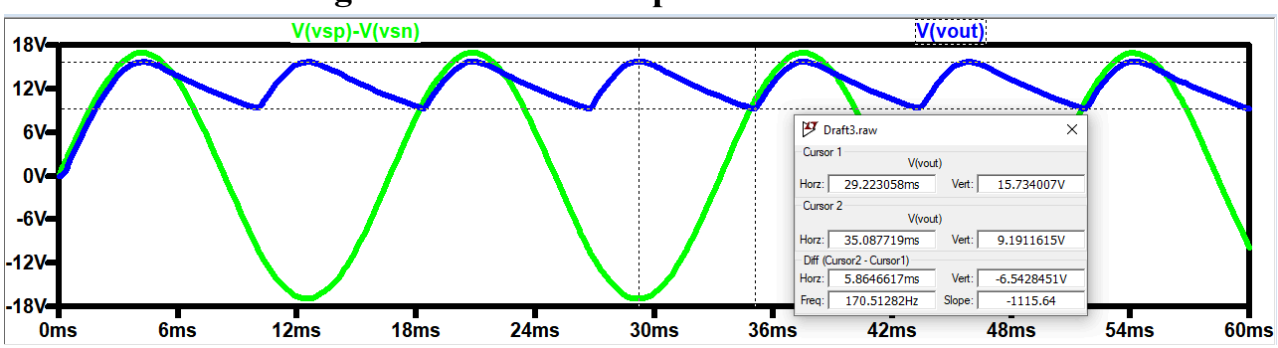

What would change if the capacitor was increased by a factor of 10?
The ripple is much smaller. This is again because the capacitor can charge for longer.

Bridge Rectifier with Large Capacitor

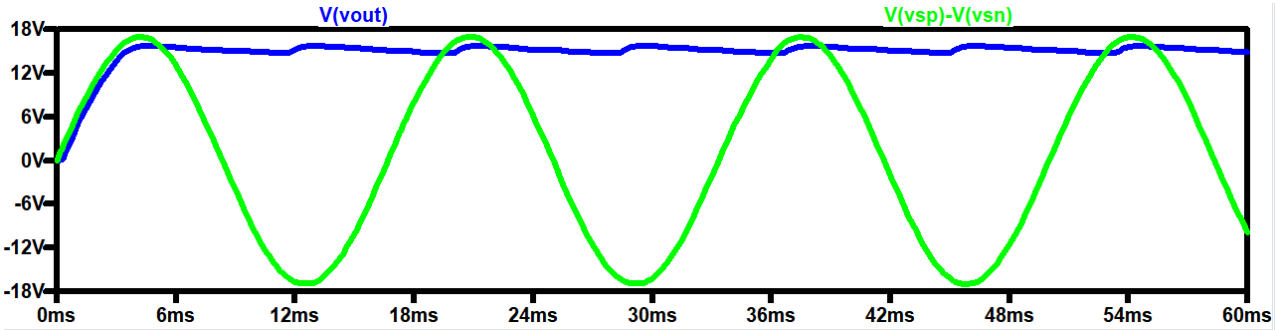

What would change if the resistor was decreased by a factor of 10?

The ripple gets bigger for the same reason as before. The increased time constant doesn't allow the capacitor to charge as much.

Bridge Rectifier with Small Resistor

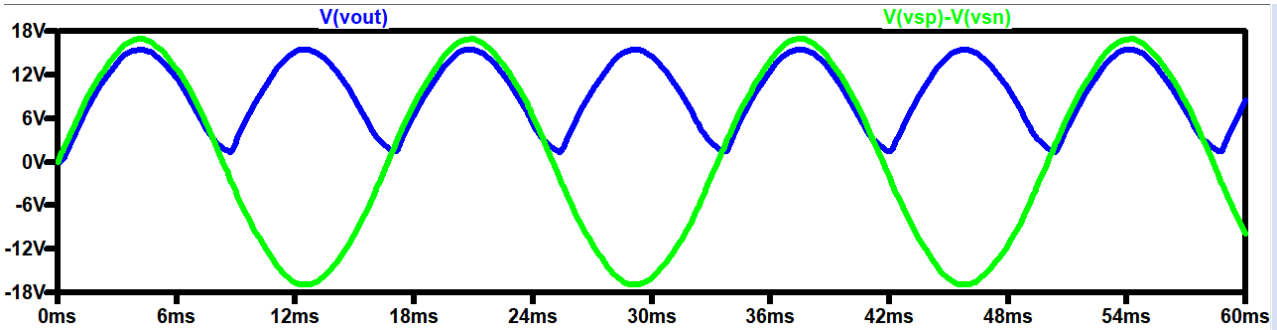

Observe the effect on the output waveform for each case.

What is the reason for the changes you observe in these waveforms?

The reason for the changes is the change in time constant as both capacitor and resistor value affect the time constant.

How does this change the performance of a rectifier?

Changing the resistor or capacitor can make the circuit better or worse. The greater the resistor and capacitor, the better the rectifier will work.

What limitations would this rectifier have?

Without the capacitor, this is two times better than the previous rectifier as the average is two times larger. Additionally, with a large capacitor, the average voltage output is very high and could possibly even saturate at the peak, which would be the most ideal for a max voltage output.

(e) Remove the transformer and connect a DC source at the input to the rectifier.

(i) Run a DC sweep from –5V to 5V.

(ii) Plot the output versus input curve to obtain the transfer characteristics.

Bridge Rectifier Transfer Characteristics

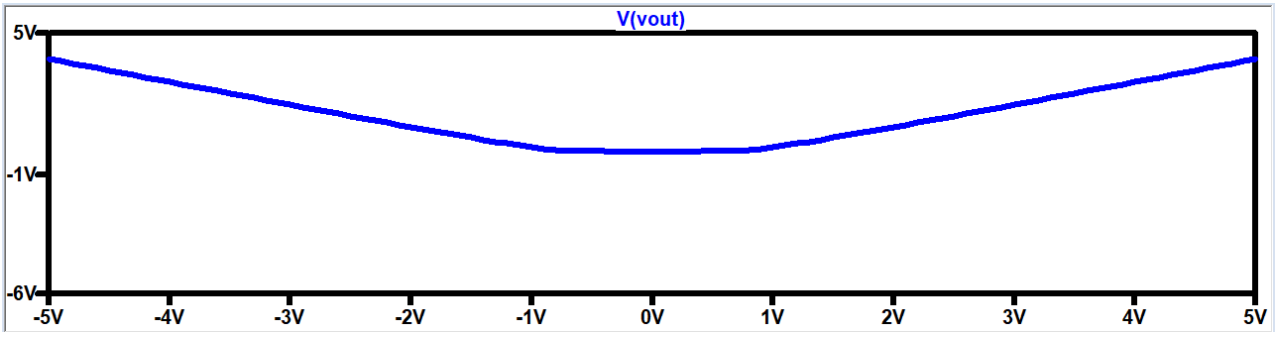

If the diode turn-on voltage changed, what would change on this curve? What does the slope of the curve indicate?

The point at which the slope is zero will change. The greater the Diode turn-on voltage, the farther away from the origin the slope will change from 0 to 1 or -1. The slope indicates Vout/Vin.

<u>Section B: Experiments/Physical bui2ld</u>

Single Phase Rectifier with Resistive Load

Build the bridge rectifier also called a single phase on your bread board. Use 1N4148 diodes. Connect the output of the 12:1 transformer to the input of your circuit on the breadboard. Connect the input and output voltages to the oscilloscope.
Using the waveform functions of the oscilloscope find the

- Average output voltage

  9.573V which is close the the 9.4V in LTspice
- Average load current

  9.573/10000=957.3microAmps
- RMS load current

  957.3/sqrt(2)=677microAmps

Take screenshots of each measurement taken (you may have more than one measurement per screen shot by adding multiple measurements on the screen)

Physical Circuit Build

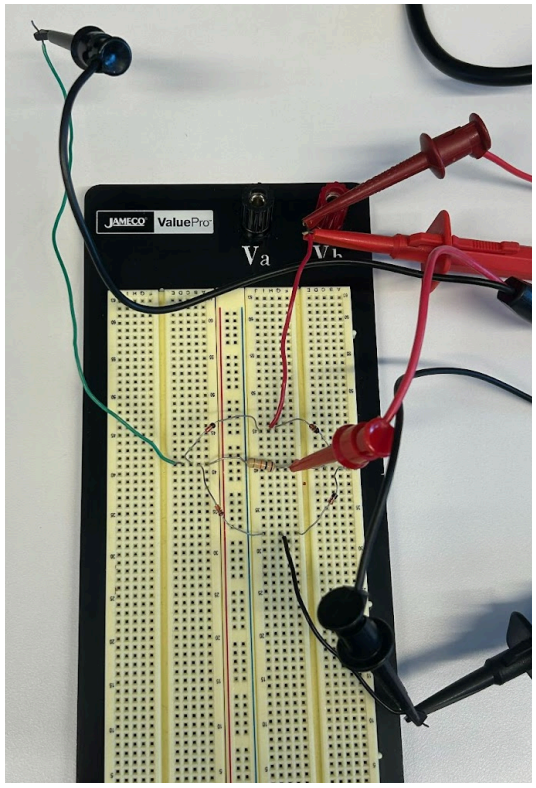

Output Waveform vs Input Waveform Over Time

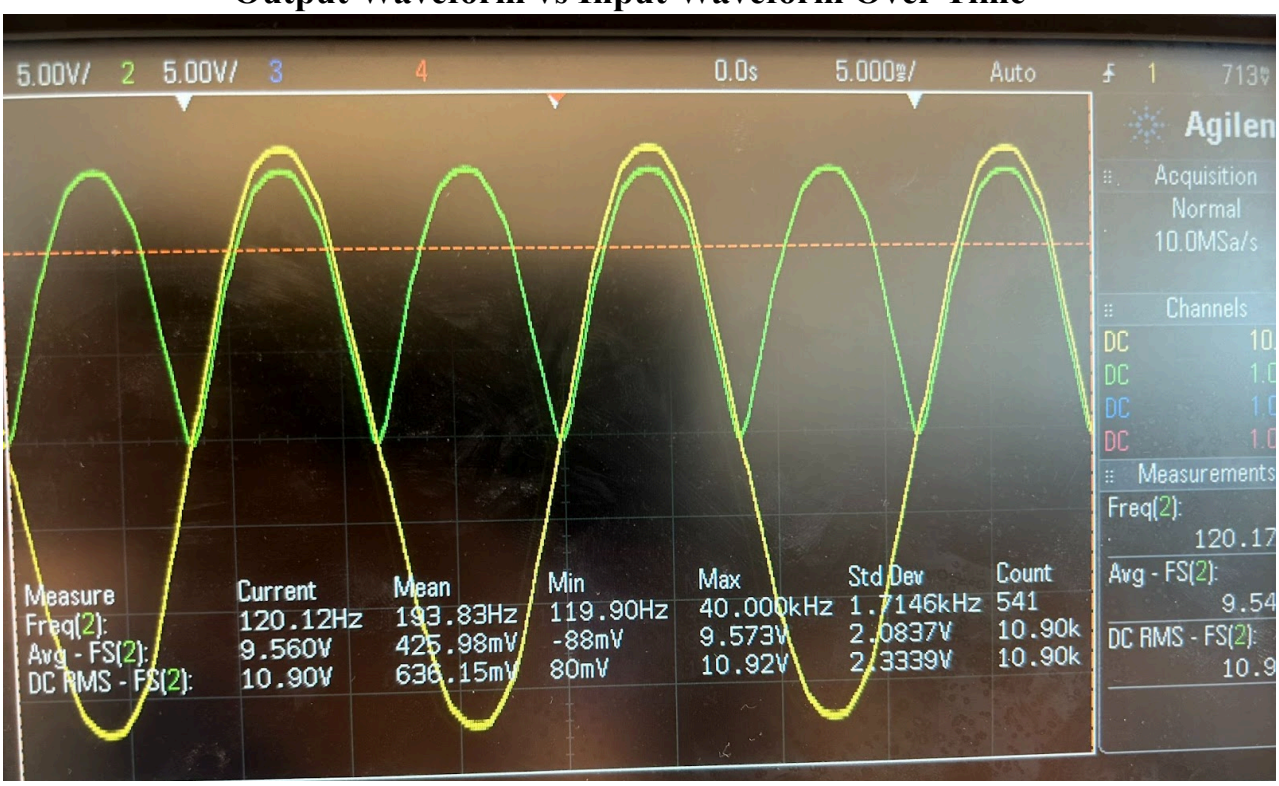

Average Voltage

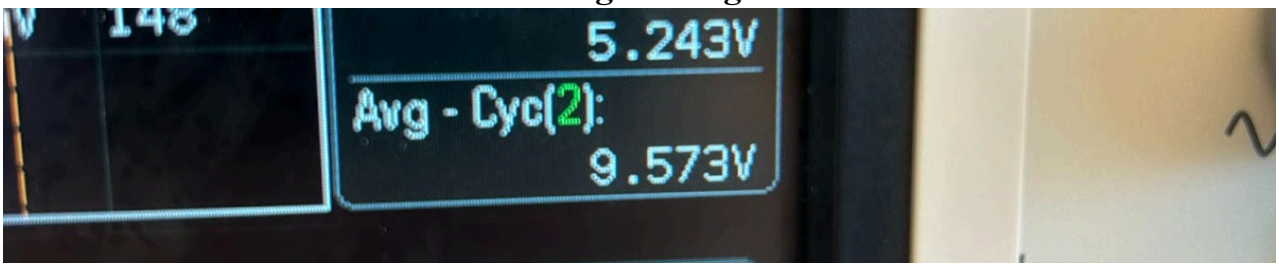

We could not take current measurements. Instead we were simply instructed to calculate them based on the average voltage.

Conclusion:

Ultimately, we have explored transformers and rectifiers. A half-wave rectifier with one diode is not very effective because it only takes one half of the sine wave. However, a rectifier that contains a bridge with 4 diodes is very effective because it can make the negative voltages positive, which maximizes the amount of output voltage. Additionally, we saw that if a large capacitor is connected in parallel to the resistor load, then it is possible to change an AC voltage to a DC voltage because charge will be maintained due to a large time constant.